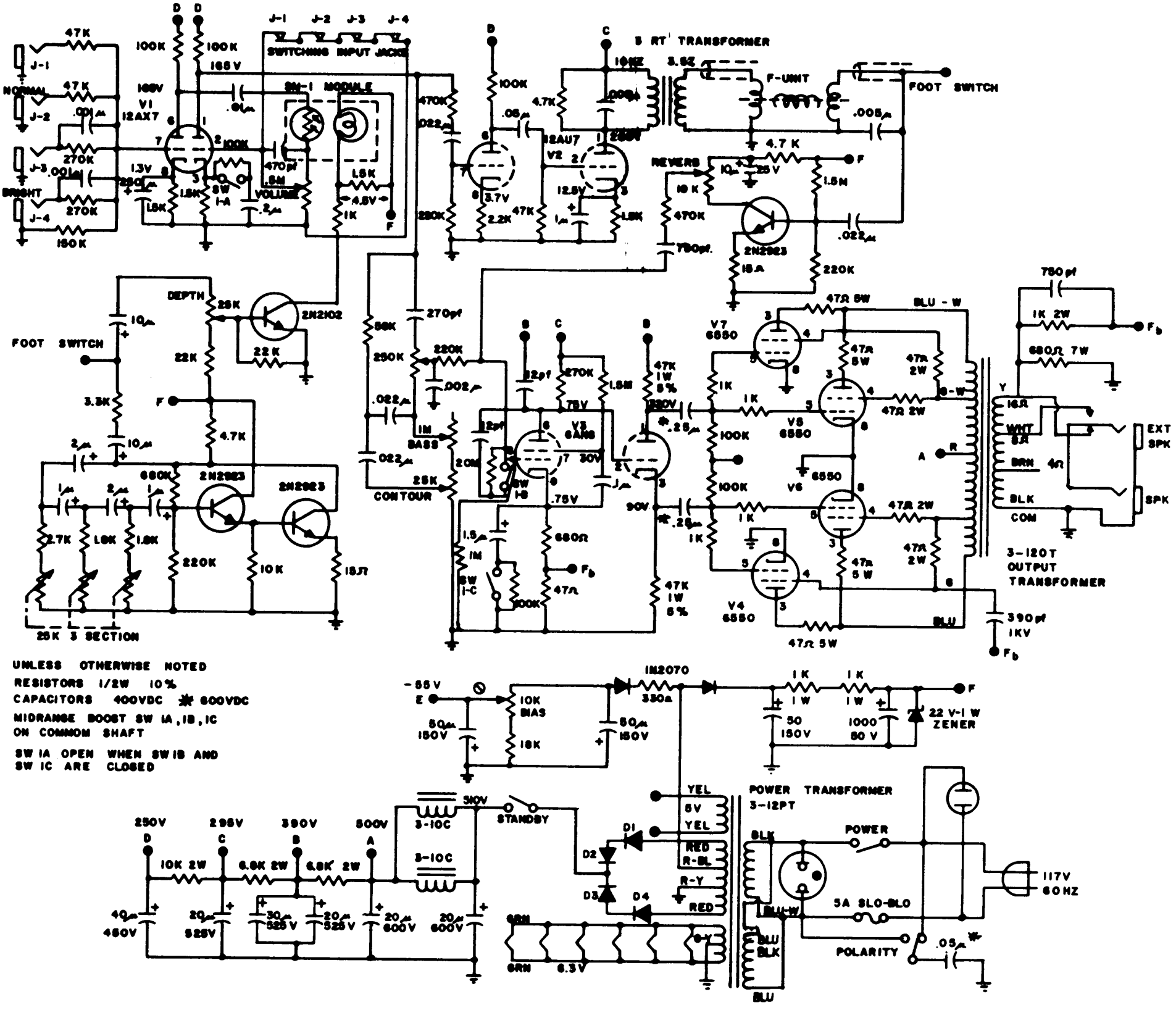
SWITCHING INPUT JACKS
J-1
J-2
J-3
J-4
NORMAL
BRIGHT
V1 12AX7
SW-1 MODULE
VOLUME
V2 12AU7
5 RT TRANSFORMER
F-UNIT
FOOT SWITCH
REVERB
2N2102
2N2923
DEPTH
CONTOUR
BASS
V3 6AN8
V4 6550
V5 6550
V6 6550
V7 6550
3-120T OUTPUT TRANSFORMER
EXT SPK
SPK
25K 3 SECTION
UNLESS OTHERWISE NOTED
RESISTORS 1/2W 10%
CAPACITORS 400VDC ✱ 600VDC
MIDRANGE BOOST SW 1A, 1B, 1C
ON COMMON SHAFT
SW 1A OPEN WHEN SW 1B AND
SW 1C ARE CLOSED
IN2070
22 V-1 W ZENER
POWER TRANSFORMER 3-12PT
STANDBY
POWER
5A SLO-BLO
POLARITY
117V 60HZ
250V
295V
390V
500V
3-10C
6.3V